INTACTON
FRABA

NON-CONTACT LENGTH & SPEED MEASUREMENT FOR TEXTILE INDUSTRY

www.intacton.en

AMERICAS
FRABA Inc.
1800 East State Street, Suite 148
Hamilton, NJ 08609-2020, USA
T +1 609 750-8705, F +1 609 750-8703
www.intacton.com info@intacton.com

EUROPE
INTACTON GmbH
Carlswerkstrasse 13c
D-51063 Köln, GERMANY
T +49 221 96213-0, F +49 221 96213-80
www.intacton.de info@intacton.de

ASIA
FRABA Pte. Ltd.
60 Alexandra Terrace,
#02-05 The Comtech, SINGAPORE 118502
T +65 6514 8880, F +65 6271 1792
www.intacton.sg info@intacton.sg

Background

Length and speed are two essential measurement parameters which are prominent in textile industries worldwide. For optimal quality at textile printing, cutting, textile power loom and spinning mill processes, the accurate determination of these parameters is required, to avoid wastage and meanwhile minimize the production costs.

The commonly used solutions, like measurement wheels combined with incremental encoders bring forth many problems. One of the biggest problems for achieving ideal process control is slippage in measurements. This leads to significant measurement errors in for example, cutting applications. Furthermore, the contact measuring principle has the risk of surface contamination and often leaves unwanted residue and marks on the textile's surfaces.

Hence, the use of such conventional systems is limited and is considered unsuitable for use over sensitive surfaces. Furthermore, these conventional measurement systems need to be constantly monitored and hence increasing installation and maintenance costs manifold.

Optical Alternative

The two non-contact sensors, COVIDIS and OPTIPACT, offer an optical alternative through slip free accurate length and velocity measurement. These sensors are specially designed for applications where feed- motion, length, velocity or differences requires measurement. Due to the non-contact technology, they are ideally suited for measuring applications in the textile industry, where measurements are of fine and sensitive materials.

Typical Applications

A broad and diverse range of applications in the textile industry are covered by two non-contact sensors, COVIDIS and OPTIPACT. COVIDIS is a high-end sensor, with a measurement uncertainty of less than 0.05%. It is especially suitable for very fast moving applications (up to 50 m/s) requiring high precision. OPTIPACT sensors are available with different configurations depending on the surface and speed of the measurand. They are used in applications with slower travelling speeds (up to 4 m/s) and are used as smart 2- Axis measurement sensors. This is a one of a kind, low cost sensor, which provides contact free 2 dimensional measurements and can be used to directly replace encoders with measuring wheels.

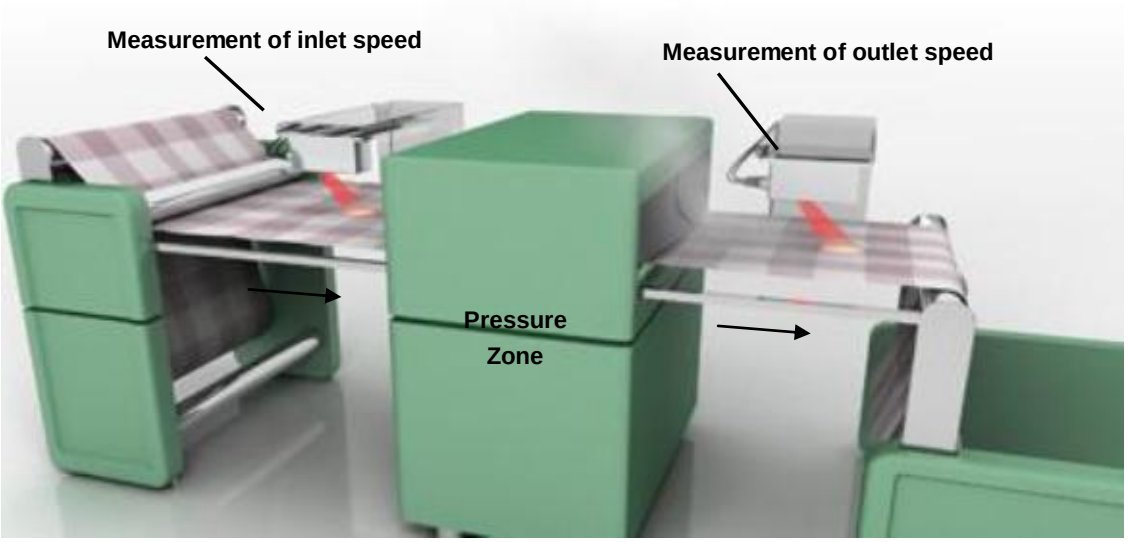

SANFOR® Process – Measurement Issues

SANFOR® Process is the defined shrinking process in textiles and cotton before use. The initial process includes moistening the material and passing of textile into the pressure zone, where it is heated and stretched. After leaving the pressure zone, the fabric is sent through rollers to remove the moisture. This in turn, shrinks the fabric. A regulated shrinking process ensures consistent quality. This quality is determined by the inlet and outlet velocity of the textile, in and out of the pressure zone. The exact knowledge of these parameters is essential for process control.

SANFOR® Process – Optical Alternative

INTACTON presents the possibility of a precise non-contact optical velocity measurement without errors caused by slippage. Therefore no contamination or marks are left on the sensitive surface. Furthermore a two dimensional measurement can be performed. Thereby not only the velocity of feed but also elongation or deformation of the material can be detected. An over speed can be signaled by digital outputs, where the maximum speed is adjustable. Furthermore, the quality of measurement can be monitored by the diagnostic outputs. Thus, the shrinkage can be optimally adjusted using the accurate measurement feedback to ensure a reproducible quality of the material.

Textile Coating & Dyeing –Measurement Issues

Textile coating and dyeing machinery often involve several textile finishing and lamination stages. In such applications the properties of the textile are changed in terms of water / chemical / light resistance or surface design. During the process several coatings run over each other. Dimensional changes in terms of linear expansion and deformation of the material require dynamic measurements to be done. The use of conventional measurement systems are unable to do so, and will lead to a loss of quality owing to measurement errors. This application in particular requires a feed speed control and a targeted re-adjustment for pre-defined process control.

Textile Coating & Dyeing – Optical Alternative

INTACTON's optical motion sensors are designed for non-contact, optical, speed and length measurement in 2 dimensions even under varying measurement conditions. The sensors can work even under deviation of working distance and varying image rates (anything above the minimum requirement). The 2D measurement is also helpful in detecting any deformations and can enable the user to adjust the control parameters accordingly. Suffice to say. OPTIPACT and COVIDIS are convenient solutions for speed control, length measurement and deformation indication in textile coating applications.

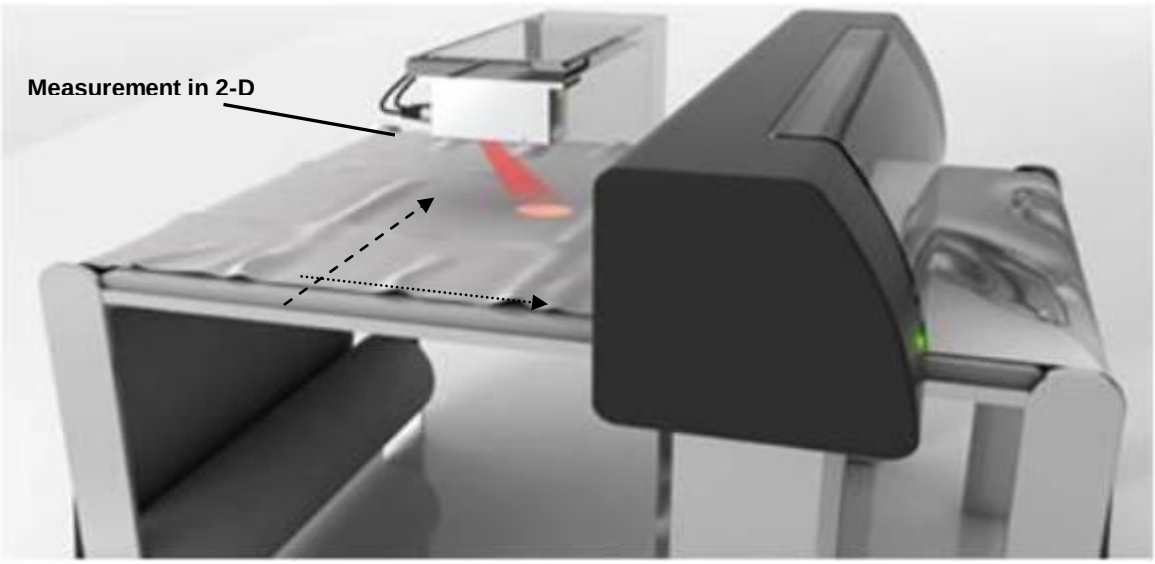

Textile Cutting and Printing – Measurement Issues

Textile cutting and printing processes require accurate length measurement for precise cutting and design of the fabric, in order to, minimize the wastage and therefore reduce the material costs. For defined stacking and cutting processes a precise measurement of these parameters is always required. The slippage in conventional measurement tools involving wheels and incremental encoder is a major hindrance in such machinery. Furthermore velocity variations particularly during roll changing processes, often leads to measurement errors. The possibility of a constant speed control or detection of over speed will also be required.

Textile Cutting and Printing – Optical Alternative

The optical non-contact principle once again comes into operation. Such consistent and accurate measurement feedback enables the control system to define a steady process control, to reduce material wastage and ultimately minimize the production costs. The digital outputs can be used to detect any over speed in the fabric feed or signal a pre-determined length. Since all the sensors can detect standstill in both forward and backward directions it makes the measurement system even more flexible.

Spinning Mills and Power loom– Measurement Issues

In spinning mills and textile power looms the supply and outlet speed of yarn, thread and fabric are continuously monitored. The machinery requires long range length and high velocity measurements. The conventionally used measurement systems often endanger the production and cause a lot of material wastage because of improper measurements due to variations in measurement conditions and constraints on length and velocity measurements. Machinery with measurement wheels suffered the most with very high errors due to slippage and high rate of textile deformation and wastage.

Spinning Mills and Power loom– Optical Alternative

The non-contact optical measurement sensors from INTACTON are ideal for usage in spinning mills and power looms as they provide accurate measurements without causing any textile deformation or high material wastage. Moreover, COVIDIS is already proved in this application and can measure high speeds of thread up to 50m/s with measurement uncertainties ≤ 0.05%. The measurement range of length is infinite and the sensors can measure over diverse range of textile materials leading to considerable cost savings.

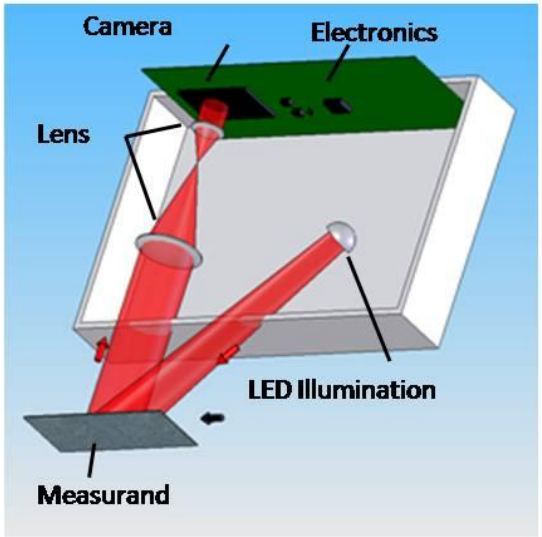

OPTIPACT

Small, Flexible, Low Cost Units

OPTIPACT sensors consist of an LED illumination unit, a 2D camera, miniaturized transmitting and receiving optics, and integrated analysis and interface electronics. With a size of 98 x 42 x 47 mm and weighing only 250 grams, the units can be easily integrated into almost any application. X-axis and Y-axis position data enable surveillance of movement in any direction – unlike in other systems, adjustment and calibration is not required. The sensors are housed in an IP65-protected aluminum enclosure. They require a supply voltage of optionally +5 or 10…30 V. An incremental interface and an RS232 interface are available for communication with a higher-level PLC. INTACTON implements field bus systems or SSI on request. The sensors' completely modular design enables easy adaptation to various specific requirements. The energy-efficient LED illumination has the added advantage of requiring no external illumination and hence less repair and service costs. Furthermore, unlike conventional optical systems, the OPTIPACT sensor is completely maintenance-free.

Function principle

The OPTIPACT system uses a very simple non-contact, slippage free measurement principle. It is basically a simple correlation method whereby the surface is observed by an area camera suitably illuminated by appropriate light sources. Displacement, direction and velocity are analyzed and calculated by comparing consecutive high resolution surface pictures. Image correlation relies on image overlaps within a captured sequence of images. With increasing speed the overlap is reduced. In consequence, the maximum detectable velocity depends on the optics design limiting the size of the field of view of the camera. This parameter simultaneously influences the structures visible on the image, the essential basis of the image correlation calculations. The OPTIPACT sensors has different models, OPT-S/F/M, varying in the design of optics and therefore in the optical resolution. The optics of OPT-S was designed for velocities up to 4m/s. The optics of OPT-F has a four-time higher magnification, thereby the velocity range decrease to 1m/s, but enables measurement on fine structured surfaces.

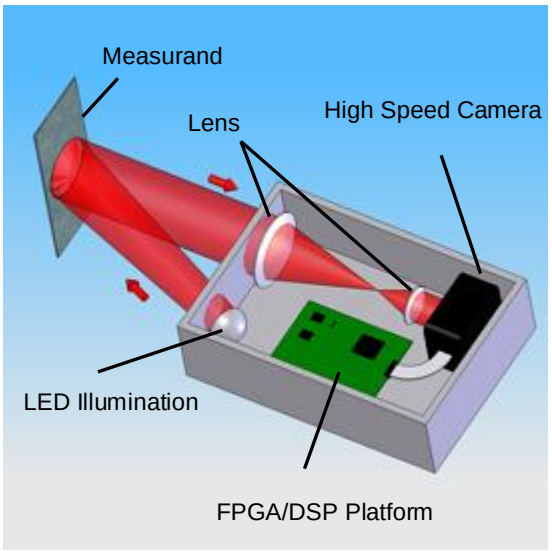

COVIDIS

High Precision Measurement

The core of the COVIDIS sensor system is a high speed line camera that detects light reflected from the object being measured. The basic measurement principle is based on further refinement of the tried-and-tested spatial frequency filtering technology. A grid structure is superimposed over the moving camera image, thus allowing a periodic output signal to be obtained, with a frequency proportional to the velocity. Using a time-related integration of the velocity signal, the distance covered can be measured with an accuracy of 0.05%.

The analysis of the data is achieved by advanced algorithm running on a powerful data processing platform. These sensor systems thus show a high degree of adaptability and can be used on a wide range of industrial surfaces. It is even possible to detect lack of motion or direction change in the object being measured, which is then taken into account in the measurement of distance covered. Using LED´s, an RS232 interface, and appropriate software, extensive configuration and diagnostic possibilities are available for users, thus facilitating the starting of operations as well as enabling preventive maintenance.

Material friendly, Maintenance-free Solution

The main advantage of non-contact measurement solution above all factors is the reduced measurement error due to the lack of slippage and dynamic measurement capabilities. This blend of characteristics also minimizes costs. Furthermore, due to the non-contact principle, the surface under measurement is not damaged by pressure, which is especially important for sensitive materials. Effective process control is possible through numerous features like precise position and velocity feedback, detection of abnormal velocity through digital outputs, and quality of measurements through diagnostic outputs. The compact design enables a hassle free installation of the sensor even in places with constrained space and difficult access. In addition to the compact design, the simple graphical user interface provides an ideal solution for easy startup and operation of the sensor. The sensors require no mechanical connection and thus provide a reliable, maintenance-free and precise solution for effective measurements over a varied range of materials and providing ideal sensing solutions for effective quality control of a variety of processes.

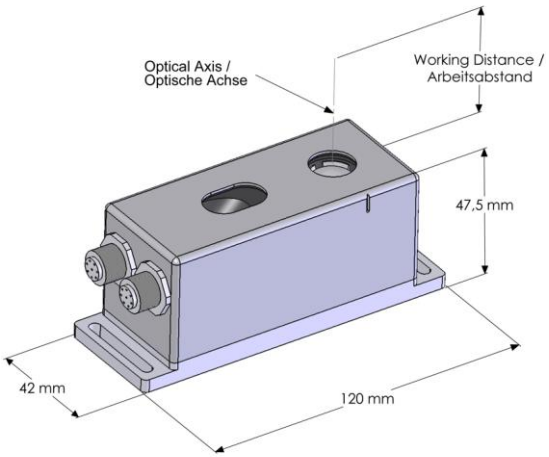

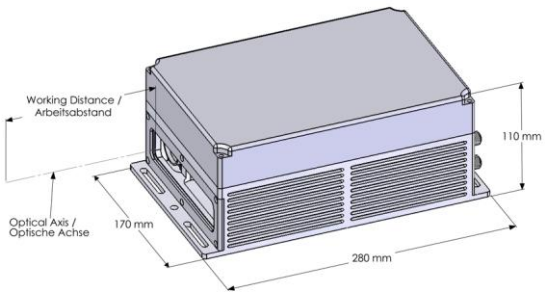

Characteristics

	COVIDIS	OPTIPACT-S	OPTIPACT-F	OPTIPACT-M
Velocity Range	± 50 m/s	± 4 m/s	± 1 m/s	± 2,5 m/s
Working Distance	300mm ±5%	40mm ±10%	15mm ±10%	180mm ±3%
Measurement Uncertainty	<0,05%	<1%	<1%	<1%
Internal Resolution (Optical)	10 µm	65 µm	15 µm	30 µm
Output Resolution (Adjustable)	Typical 100µm; Factory Setting			
Illumination	Red LED (*);No protective device required			

(*) test according to DIN EN 62471:2009-02: safety of lamps and lamp systems'

Electrical Data

Supply Voltage	+20 - 30 V DC	+5 V oder +10 – 30 V DC		
Power Consumption	24 W	2,5 W	2,5 W	4 W
Ingress Protection	IP 65	IP 65	IP 65	IP 65

Mechanical Data

Working Temperature	0 – 50 °C	0 – 55 °C	0 – 55°C	0 – 55 °C
Housing Material	Aluminium			
Shock Resistance(EN60068-2-27)	≤25 g (Halbsinus, 6ms) (*)			
Continuous Shock (EN60028-2-29)	≤10 g (Halbsinus, 16ms) (*)			
Vibration Resistance (EN 60068-2-6)	≤1 g (5 Hz... 2000 Hz, Sinus)(*)			
Dimensions	254x150x120	120x42x47		280x80x170
Weight	4 kg	0,25 kg		3,5 kg

(*) Classification according to 3M5 (EN 60721-3-3: use in places where significant vibration. For example by machine, vehicles or collisions with high energy content, for example by heavy machines or conveyor belts occur)

INTACTON
FRABA

INTACTON GmbH

INTACTON GmbH was founded in 2004 as a FRABA Group enterprise. Based in Cologne, we develop, manufacture and distribute optical motion sensors for measurement of lengths and velocity. Since 2006, INTACTON has been establishing and extending a network of national and foreign distributors that, even when far away from the firm's headquarters, ensures competence in consultation in the local language. Manufacturers and users of production machines, textile manufacturers as well as companies in the fields of lift technology or special-purpose vehicles constitute the main customers of INTACTON.

FRABA Group

FRABA Group today comprises a set of companies focused on niches in the industrial automation market. The company was founded in Cologne, Germany in 1918 and initially manufactured relays in serial production. This focus was maintained until the mid sixties and provided the basis for entry into the control market, and over 13,000 machine controls were installed. In the seventies, FRABA was the pioneer in developing the market for rotary absolute optical encoders. Today the subsidiary POSITAL develops and markets these sensors as well as inclination sensors. Since the 90's, the subsidiary VITECTOR has become one of the leading manufacturers of safety sensors for doors and gates.

AMERICAS
FRABA Inc.
1800 East State Street, Suite 148
Hamilton, NJ 08609-2020, USA
T +1 609 750-8705, F +1 609 750-8703
www.intacton.com info@intacton.com

EUROPE
INTACTON GmbH
Carlswerkstrasse 13c
D-51063 Köln, GERMANY
T +49 221 96213-0, F +49 221 96213-80
www.intacton.de info@intacton.de

ASIA
FRABA Pte. Ltd.
60 Alexandra Terrace,
#02-05 The Comtech, SINGAPORE 118502
T +65 6514 8880, F +65 6271 1792
www.intacton.sg info@intacton.sg